BI2-EG08K-VP6X-H1341
Inductive Sensor – With Increased Switching Distance

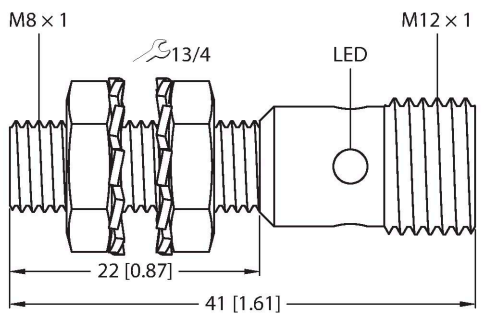

Technical data

Type	BI2-EG08K-VP6X-H1341
ID	4669416
General data	
Rated switching distance	2 mm
Mounting conditions	Flush
Secured operating distance	≤ (0.81 × Sn) mm
Correction factors	St37 = 1; Al = 0.3; stainless steel = 0.7; Ms = 0.4
Repeat accuracy	≤ 2 % of full scale
Temperature drift	≤ ±10 %
Hysteresis	20 %
Electrical data	
Operating voltage U_B	10…30 VDC
Ripple U_{ss}	≤ 10 % U_{Bmax}
DC rated operating current I_e	≤ 150 mA
No-load current	≤ 15 mA
Residual current	≤ 0.1 mA
Isolation test voltage	0.5 kV
Short-circuit protection	yes/Cyclic
Voltage drop at I_e	≤ 1.8 V
Wire break/reverse polarity protection	yes/Complete
Output function	4-wire, Complementary contact, PNP
Switching frequency	3 kHz
Mechanical data	
Design	Threaded barrel, M8 x 1
Dimensions	41 mm
Housing material	Stainless steel, 1.4305 (AISI 303)

Features

- M8 × 1 threaded barrel
- Stainless steel, 1.4305 (AISI 303)
- Large sensing range
- DC 4-wire, 10…30 VDC
- Changeover contact, PNP output
- M12 x 1 male connector

Wiring diagram

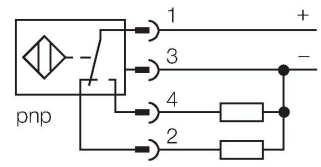

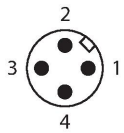

Functional principle

Inductive sensors detect metal objects contactless and wear-free. For this, they use a high-frequency electromagnetic AC field that interacts with the target. Inductive sensors generate this field via an RLC circuit with a ferrite coil.

BI2-EG08K-VP6X-H1341| 21-02-2025 15-07 | Technical modifications reserved

Technical data

Active area material	Plastic, PA6.6
Max. tightening torque of housing nut	5 Nm
Electrical connection	Connector, M12 × 1
Environmental conditions	
Ambient temperature	-25…+70 °C
Vibration resistance	55 Hz (1 mm)
Shock resistance	30 g (11 ms)
Protection class	IP67
MTTF	2283 years acc. to SN 29500 (Ed. 99) 40 °C
Switching state	LED, Yellow

Mounting instructions

Mounting instructions/Description

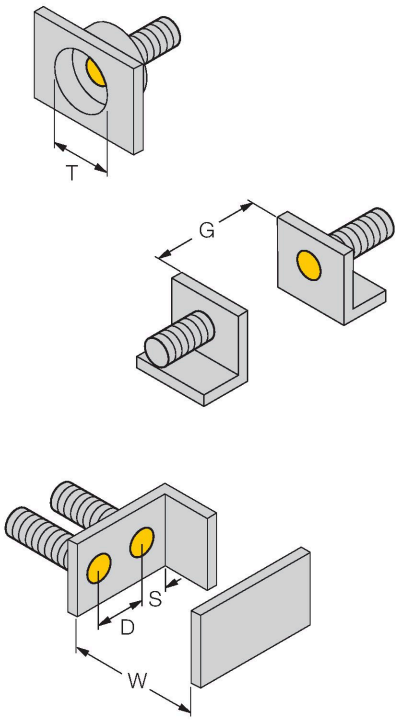

Distance D	2 x B
Distance W	3 x Sn
Distance T	3 x B
Distance S	1.5 x B
Distance G	6 x Sn
Diameter active area B	Ø 8 mm

BI2-EG08K-VP6X-H1341| 21-02-2025 15-07 | Technical modifications reserved

Accessories

BST-08B	6947210

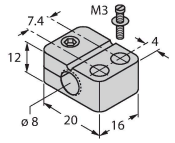

Mounting clamp for threaded barrel sensors, with dead-stop; material: PA6

QM-08	6945100

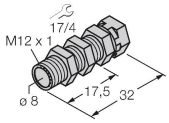

Quick-mount bracket with dead-stop, chrome-plated brass, male thread M12 x 1. Note: The switching distance of proximity switches may be reduced through the use of quick-mount brackets.

MW08	6945008

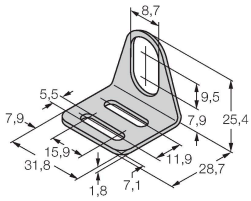

Mounting bracket for threaded barrel sensors; material: Stainless steel A2 1.4301 (AISI 304)

BSS-08	6901322

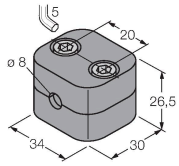

Mounting clamp for smooth and threaded barrel sensors; material: Polypropylene

MBS80	69479

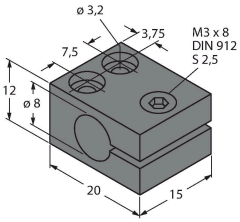

Mounting clamp for smooth barrel sensors; mounting block material: Anodized aluminum

Accessories

Dimension drawing	Type	ID	
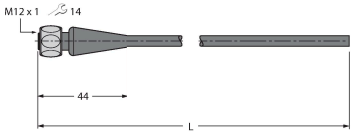	RKH4.4-2/TFE	6934473	Connection cable, M12 female connector, straight, 4-pin, stainless steel coupling nut, cable length: 2 m, jacket material: PVC, gray; temperature range: -25…+80 °C
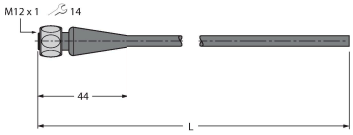	RKH4.4-2/TFG	6933086	Connection cable, M12 female connector, straight, 4-pin, stainless steel coupling nut, cable length: 2 m, jacket material: TPE, gray; temperature range: -40…+105 °C

BI2-EG08K-VP6X-H1341| 21-02-2025 15-07 | Technical modifications reserved