PKG4M-0.2-PSG4M/TXL
Actuator, Sensor and Supply Cable, PUR – Extension Cable

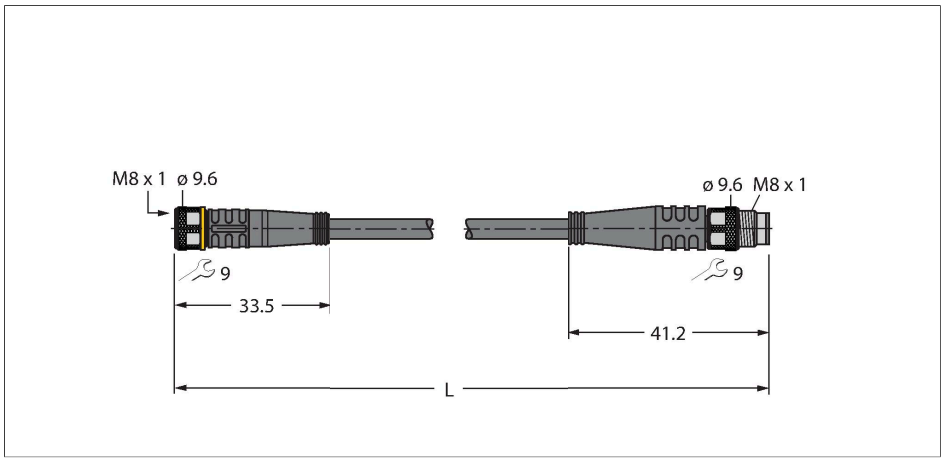

Technical data

Type	PKG4M-0.2-PSG4M/TXL
ID	6627044
Connector A	Female, M8 × 1, Straight
Number of pins	4
Contacts	Brass, CuZn, Gold-plated
Contact carriers	Plastic, TPU, Black
Connector body	Plastic, TPU, Black
Coupling nut/screw	Brass, CuZn, Nickel-plated
Seal	Plastic, FPM/FKM
Tightening torque (range)	0.5 … 0.6 Nm (observe max. torque of mating connec-tor!)
Mechanical lifespan	> 100 Mating cycles
Pollution degree	3
Protection class	IP67, IP69K, Only in screwed condition
Connector B	Male, M8 × 1, Straight
Number of Pins	4
Contacts	Brass, CuZn, Gold-plated
Contact carriers	Plastic, TPU, Black
Connector body	Plastic, TPU, Black
Coupling nut/retaining screw	Brass, CuZn, Nickel-plated
Tightening torque	0.5 … 0.6 Nm (observe max. torque of mating connector!)
Mechanical life	> 100 Mating cycles
Pollution degree	3
Protection class	IP67, IP69K, Only when screwed togeth-er
Cable	
Cable diameter	Ø 4.5 mm ±0.20

Features

- Female M8, straight, 4-pin
- Male M8, straight, 4-pin
- Jacket material: PUR
- Jacket color: black
- Suitable for drag chain use
- Resistant to chemicals, UV radiation and oils
- Flame retardant (FT2 acc. to UL 1581, IEC 60332-2-2)
- Resistant to welding sparks
- Free from halogen, silicone, PVC and LABS
- Particularly resistant to abrasion
- Protection class: IP67, IP69K
- Cable length: 0.2 m

Cable Cross-Section

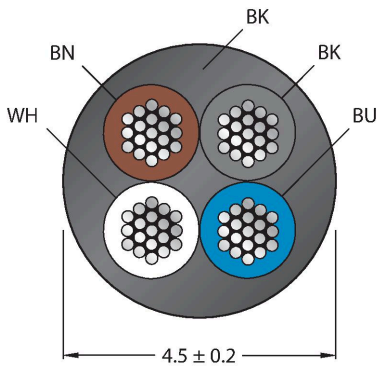

Contact assignment

PKG4M-0.2-PSG4M/TXL| 23-02-2025 13-03 | Technical modifications reserved

Technical data

Cable length	0.2 m
Cable jacket	PUR, Black
Core insulation	PP
Core cross-section	4 x 0.34 mm²
Arrangement of strands	42 x 0.1 mm
Core colors	BN, WH, BU, BK
Electrical properties at +20 °C	
Rated voltage	50 V_{AC}/60 V_{DC}
Test voltage	2000 V
Current	4 A
Insulation resistance	> 30.5 MΩ/km
forward resistance	max. 57 Ω/km
Mechanical and chemical properties	
Bending radius (stationary installation)	≥ 5 x Ø
Bending radius (flexible use)	≥ 10 x Ø
Bending cycles	≥ 5 million
Admissible acceleration	max. 5 m/s²
Admissible travel path, horizontal	5 m (at 5 m/s²)
Admissible travel path, vertical	2 m (at 5 m/s²)
Admissible traversing speed	3.3 m/s
Torsional stress	± 180 °/m
Ambient temperature (fixed)	-50…+80 °C
Ambient temperature (mobile)	-25…+80 °C
Ambient temperature (drag chain)	-25…+60 °C
Approvals	cULus

Circuit Diagram

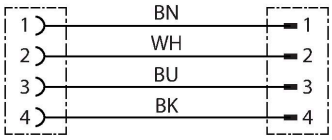

Accessories

TORQUE-WRENCH-SET-AS	6936170

Torque wrench set; handles with adjustable torque 0.4-1.0 Nm, torque wrench for M8 (SW9), fork wrench for M12 (SW 14)

BLANK-LABEL-FOR-CORDSETS-TEL-TXL	6936206

Label for TEL and TXL cables, length: 18 mm, height: 4 mm, material: polycarbonate (PC), color: white, halogen-free and flame-retardant

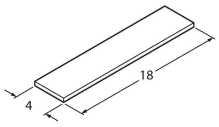

Accessories

Dimension drawing	Type	ID	
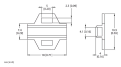	LABEL-HOLDER-FLEX-PVC	100048170	PVC label holder for identification of extension cables (TEL/TXL product series); for cable diameters: min. 5 mm;

PKG4M-0.2-PSG4M/TXL| 23-02-2025 13-03 | Technical modifications reserved

Dimension drawing	Type	ID	
			dimensions 4 × 18 mm; delivery unit: 50 pcs. per package

PKG4M-0.2-PSG4M/TXL| 23-02-2025 13-03 | Technical modifications reserved